YANMAR

PARTS CATALOG

0CW10-M67600EN

Last update Apr., 2019

PREFACE

1. This parts catalog is the 1st edition of 3TNM72-HWG for WORMS.

Pub.No. : 0CW10-G67600
Published : August, 2010

2. Model name

Engine model	Vehicle	Vehicle made by
3TNM72-HWG	GENERATOR	WORMS

Directions for the Parts Catalog.

1.This Parts Catalog shows both standard and optional parts.
2.Parts may change without prior notice.
3.The following is an example of the Parts Catalog format.

0CF10-G21601 29. FUEL INJECTION PUMP(W/BOOST)

(A)=4JH-DT
(B)=4JH-DTZ
(C)=4JH-DTZP
(D)=4JH-DTZA
(E)=4JH-DTZY
(F)=

① REF.	② LEV.	PARTS NO.	DESCRIPTION	Q'TY (A)	(B)	(C)	(D)	(E)	(F)	③ I	⑤ R
1	1	729595-51390	FUEL INJECTION PUMP	1	1	1	1	1			1
1-1	1	729595-51391	FUEL INJECTION PUMP	1	1	1	1	1		N	1
	(A=E00185)	(B=E00200)									
3	2	26022-060162	SCREW M 6X 16	9	9	9	9	9			
3-1 ④	2	26022-060162	SCREW M 6X 16	4	4	4	4	4		K	
	(A=E00156)	(B=E00156)	(C=E00156) (D=E00156)	(E=E00156)							
4	2	129470-51040	CAMSHAFT	1	1	1	1	1			
5	2	122710-51050	BEARING, ROLLER	2	2	2	2	2			
6	2	129470-51060	RETAINER	1	1	1	1	1			

Remarks
(1) BOOST COMPEMSATOR TYPE. OPTIONAL PART, TO E00155,(4JH-DT, 4JH-DTZ

①Ref. No.

The Ref. No. listed may not be in accordance with the illustration Ref. No.

(Ex.) Illustration No. 1 List Ref No. 1 (Before change) → 1- 1 (After change)

For interchangeable symbols N, R and K, illustrations for new parts may be abbreviated.

②Lev. (Level)

Level indication
The numbers below indicate the level of relativity towards the main part.
1 ----- Main parts (Assembly parts)
2 ----- Sub component included in " 1 ".
3 ----- Sub component included in " 2 ".
Note) Parts that are not for sale are partially illustrated but not listed.

③Interchangeability Symbol

When a part change takes place, one of the following interchangeability symbols is indicated beside the part.

Symbol	Interchangeability	Contents note
N	Old ← Yes / No → New	New Part is interchangeable for Old Part but Old Part is not interchangeable for New Part.
Q	Old ← No / Yes → New	New Part is not interchangeable for Old Part but Old Part is interchangeable for New Part.
R	Old ← Yes / Yes → New	New/ Old Parts are both interchangeable.
S	Old ← No / No → New	New/ Old Parts are both not interchangeable.
W		Part newly added.
Z		Part discontinued.
F		Not interchangeable by a single part but interchangeable together with related parts.
K		Changes only for used parts quantities.

④Effective Machine No.

When a part changes, the effective Machine No. will be indicated in the (A)-(F) column.

Product Symbol	Product No.	Product Symbol	Product No.
C	Clutch No. Compressor No.	F	Machine No. (Agricultural Equip.)
D	Drive No.	M	Machine No.
E	Engine No.		

Note 1) A date may follow the symbol. (Ex.) 1996.01
Note 2) " XXXXX " and " ZZZZZ " are for parts that could not be predicted or for engine models that could not be identified.
Note 3) (A=E00185) is the E (Engine Serial Number) for the column (A) model (in this case 4JH-DT) after the parts design change.

⑤Remarks

Figures or alphabets (symbols) are entered in the remarks column.
The comments (remarks) on parts that are indicated at the bottom of the illustration are the same symbols as those stated above.

Contents

0CW10-M67600

Fig. No.	Fig. Name	Fig. No.	Fig. Name
3TNM72-HWG			
1.	CYLINDER BLOCK		
2.	GEAR HOUSING		
3.	FLYWHEEL HOUSING & OIL SUMP		
4.	CYLINDER HEAD & BONNET		
5.	EXHAUST MANIFOLD		
6.	CAMSHAFT & DRIVING GEAR		
7.	CRANKSHAFT & PISTON		
8.	LUB. OIL SYSTEM		
9.	COOLING WATER SYSTEM		
10.	FUEL INJECTION PUMP		
11.	GOVERNOR		
12.	FUEL INJECTION VALVE		
13.	FUEL LINE		
14.	STARTING MOTOR		
15.	GENERATOR		
17.	(15A)GENERATOR		
16.	GASKET SET		

Fig.1. CYLINDER BLOCK

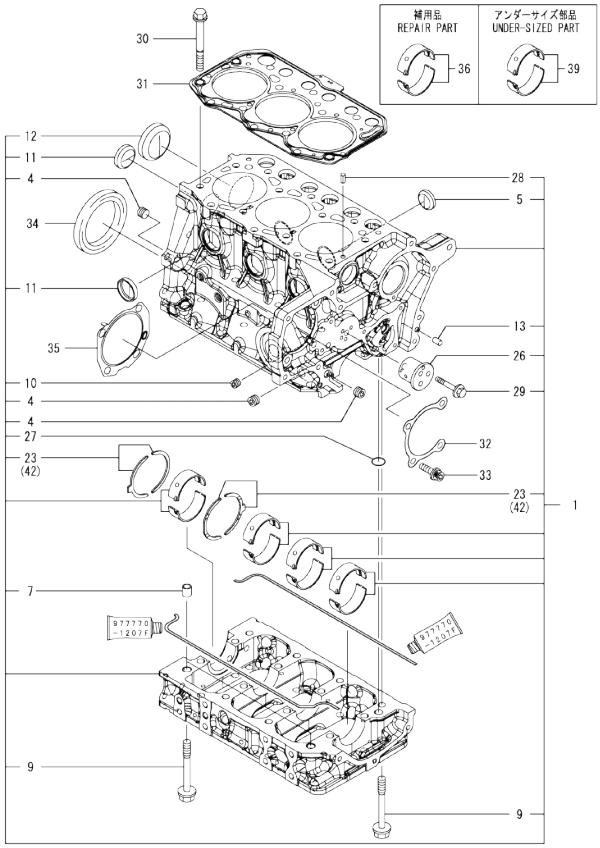

Remarks
(1)Repair part.
(2)Under-sized(U.S.=0.25)part.
(3)Over-sized(O.S.=0.25)part.

(A)=3TNM72-HWG
(B)=
(C)=
(D)=
(E)=
(F)=

No.	Lev.	Parts No.	Description	Q'ty (A)	(B)	(C)	(D)	(E)	(F)	I	R
1	1	119027-01560	BLOCK ASSY, CYLINDER	1							
4	2	124060-01050	PLUG, PT1/8	3							
5	2	119125-01970	PLUG, 25	3							
7	2	119125-01960	PIPE, KNOCK	2							
9	2	119125-02061	BOLT, METAL CAP	16							
10	2	23876-005000	PLUG, R005	1							
11	2	27241-300000	PLUG 30	4							
12	2	27241-450000	PLUG, 45	1							
13	2	119620-01620	PIN, M6X10	2							
23	2	119125-02930	BEARING, THRUST	2							
26	2	119125-25050	SHAFT, IDLE GEAR	1							
27	2	129900-32040	O-RING, P14	1							
28	2	22351-060012	PIN, SPRING 6.0X12	2							
29	2	26106-060402	BOLT, M6X 40 PLATED	3							
30	1	119515-01200	BOLT, HEAD	14							
31	1	119025-01331	GASKET, HEAD	1							
32	1	119125-01790	GASKET	1							
33	1	119125-01800	BOLT	4							
34	1	119734-02220	SEAL, OIL	1							
35	1	119125-51800	GASKET	1							
36	1	119125-02900	BEARING, MAIN	4							1
39	1	119125-02910	BEARING, 0.25 US	4							2
42	1	119125-02940	BEARING, THRUST 0.25	2							3

N:Old ←Yes/No→ New. Q:Old ←No/Yes→ New. R:Old ←Yes/Yes→ New. S:Old ←No/No→ New. W:Add. Z:Discontinued. F:Interchangeable by set. K:Q'ty Change

Copyright (C) YANMAR CO., LTD. All RightsReserved.

Fig.2. GEAR HOUSING

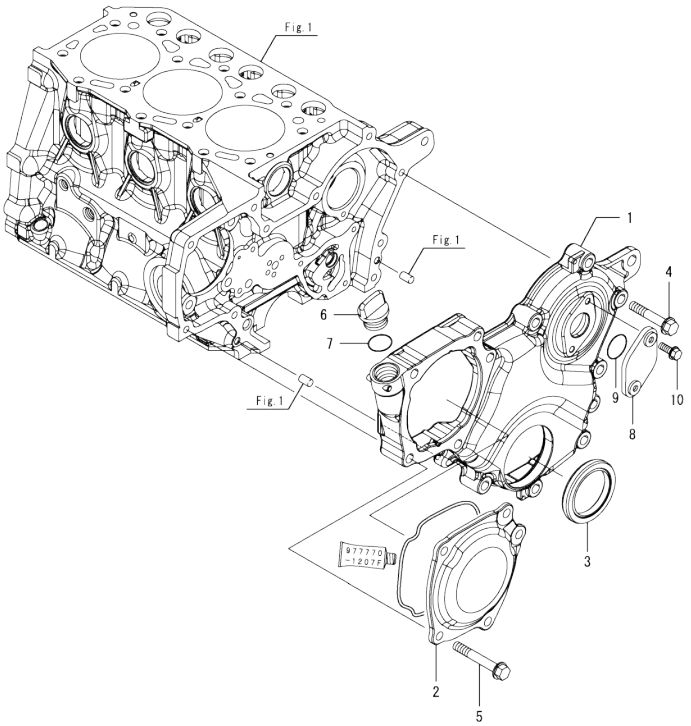

(A)=3TNM72-HWG (D)=
(B)= (E)=
(C)= (F)=

No.	Lev.	Parts No.	Description	Q'ty (A)	(B)	(C)	(D)	(E)	(F)	I	R
1	1	119025-01530	CASE, GEAR	1							
2	1	119125-01750	COVER	1							
3	1	119717-01800	SEAL, OIL	1							
4	1	26106-080352	BOLT, M8X 35 PLATED	8							
5	1	26106-080452	BOLT, M8X 45 PLATED	5							
6	1	106760-01770	CAP	1							
7	1	24311-000180	O-RING, 1AP18.0	1							
8	1	121023-01551	COVER	1							
9	1	24341-000240	O-RING, 1AS24.0	1							
10	1	26106-060162	BOLT, M6X 16 PLATED	2							

N:Old ←Yes/No→ New. Q:Old ←No/Yes→ New. R:Old ←Yes/Yes→ New. S:Old ←No/No→ New. W:Add. Z:Discontinued. F:Interchangeable by set. K:Q'ty Change

Copyright (C) YANMAR CO., LTD. All RightsReserved.

Fig.3. FLYWHEEL HOUSING & OIL SUMP

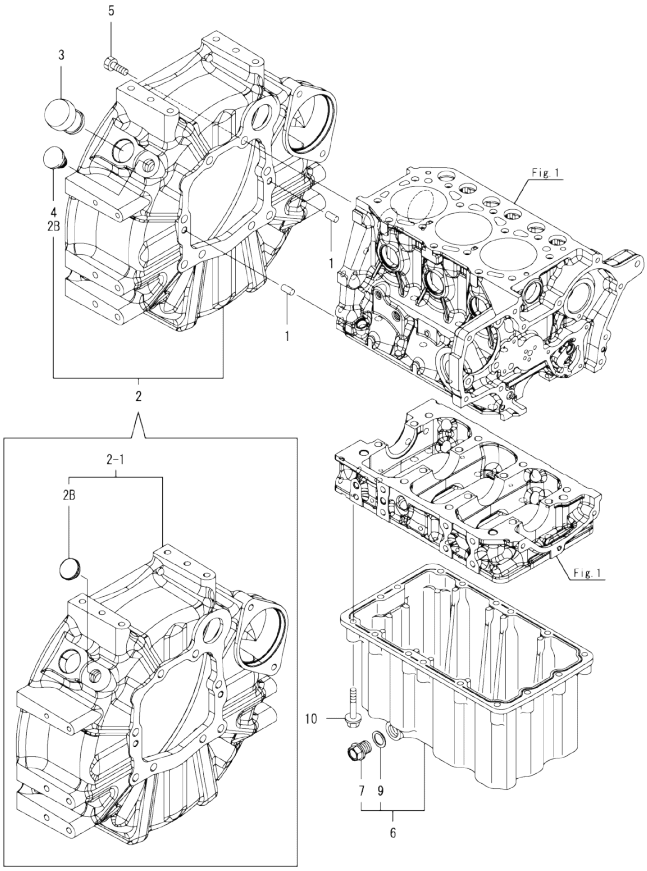

Remarks
(1)Fig.7 No.8-1 & Fig.14 No.1-1 interchangeable by set.

(A)=3TNM72-HWG (D)=
(B)= (E)=
(C)= (F)=

No.	Lev.	Parts No.	Description	Q'ty (A)	(B)	(C)	(D)	(E)	(F)	I	R
1	1	129100-01580	PIN, PARALLEL 8X16	2							
2	1	119128-01670	HOUSING ASSY, WHEEL	1							
2-1	1	119D00-01610	HOUSING ASSY, WHEEL	1						F	1
2B	(A=E047983) 2 (A=*2013.05.)	119888-01850	PLUG, RUBBER 19	1						W	
3	1	119620-01750	CAP, WHEEL COVER	1							
4	1 (A=*2013.05.)	119888-01850	PLUG, RUBBER 19	1						Z	
5	1	26206-100252	BOLT, M10X 25 PLATED	8							
6	1	119025-01760	OIL PAN ASSY	1							
7	2	119025-01690	PLUG, DRAIN 16	1							
9	2	22190-160002	WASHER, SEAL 16	1							
10	1	26106-060352	BOLT, M6X 35 PLATED	16							

N:Old ←Yes/No→ New. Q:Old ←No/Yes→ New. R:Old ←Yes/Yes→ New. S:Old ←No/No→ New. W:Add. Z:Discontinued. F:Interchangeable by set. K:Q'ty Change

Copyright (C) YANMAR CO., LTD. All RightsReserved.

Fig.4. CYLINDER HEAD & BONNET

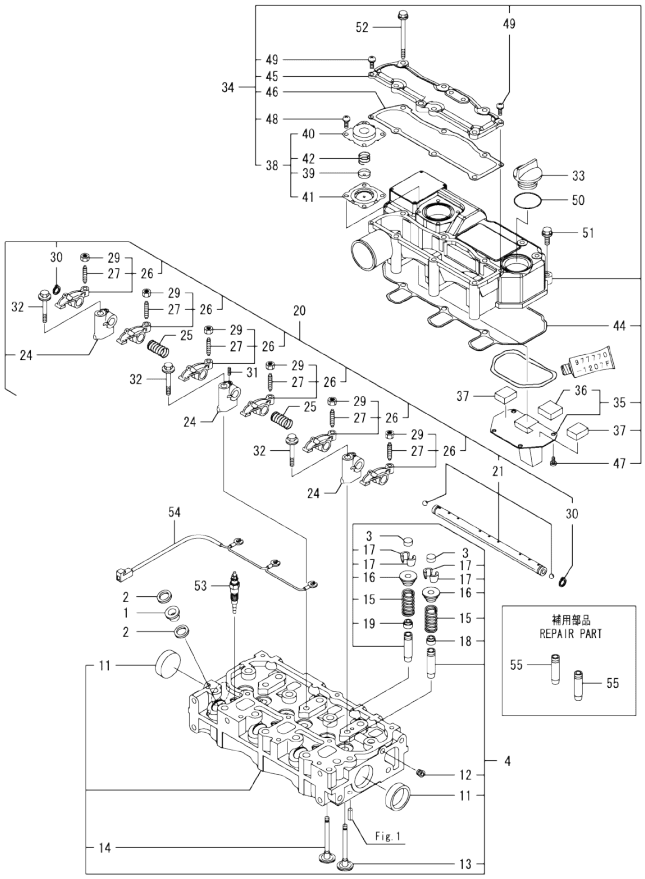

(A)=3TNM72-HWG
(B)=
(C)=
(D)=
(E)=
(F)=

No.	Lev.	Parts No.	Description	Q'ty (A)	(B)	(C)	(D)	(E)	(F)	I	R
1	1	129901-11450	PROTECTOR, NOZZLE	3							
2	1	119600-11460	GASKET, NOZZLE	6							
3	1	105010-11490	CAP, VALVE	6							
4	1	119517-11740	HEAD ASSY, CYLINDER	1							
11	2	119285-11990	PLUG, 35	2							
12	2	23876-005000	PLUG, R005	1							
13	2	119515-11101	VALVE, INTAKE	3							
14	2	119515-11110	VALVE, EXHAUST	3							
15	2	119717-11131	SPRING, VALVE	6							
16	2	129508-11180	RETAINER, SPRING	6							
17	2	119717-11190	COTTER	12							
18	2	119717-11340	SEAL, VALVE STEM	3							
19	2	119717-11350	SEAL, VALVE STEM	3							
20	1	119515-11200	SUPPORT ASSY, ARM	1							
21	2	119515-11240	SHAFT ASSY, ROCKER	1							
24	2	119717-11260	SUPPORT, ROCKER ARM	3							
25	2	119515-11280	SPRING	2							
26	2	119717-11650	ARM, ROCKER	6							
27	3	129150-11230	SCREW, VALVE ADJUST	6							
29	3	129150-11750	NUT, M8	6							
30	2	22242-000120	RING, 12	2							
31	2	26979-050162	SCREW, M5X16	1							
32	1	26106-080402	BOLT, M8X 40 PLATED	3							
33	1	124160-01751	COVER, FILLER	1							
34	1	119515-11380	BONNET ASSY, HEAD	1							
35	2	119717-03031	PLATE	1							
36	3	119717-03070	BAFFLE, BREATHER	1							
37	2	119717-03070	BAFFLE, BREATHER	2							
38	2	119802-03100	DIAPHRAGM ASSY	1							
39	3	119802-03110	PLATE	1							
40	3	119802-03121	COVER, DIAPHRAGM	1							
41	3	119802-03131	DIAPHRAGM	1							
42	3	119802-03141	SPRING, DIAPHRAGM	1							
44	2	119515-11310	GASKET, BONNET	1							
45	2	119515-11320	COVER, BONNET	1							
46	2	119515-11330	GASKET	1							
47	2	22857-500100	SCREW, 5X10	4							
48	2	22857-500100	SCREW, 5X10	4							
49	2	22857-500160	SCREW, 5X16	2							
50	1	24311-000320	O-RING, 1AP32.0	1							
51	1	26106-060202	BOLT, M6X 20 PLATED	3							
52	1	26106-060752	BOLT, M6X 75 PLATED	6							
53	1	119125-77800	PLUG, GLOW	3							
54	1	119125-77820	CONNECTOR, GLOW PLUG	1							
55	1	119515-11800	GUIDE, VALVE	6							1

Remarks
(1)Repair part.

N:Old ←Yes/No→ New. Q:Old ←No/Yes→ New. R:Old ←Yes/Yes→ New. S:Old ←No/No→ New. W:Add. Z:Discontinued. F:Interchangeable by set. K:Q'ty Change

Copyright (C) YANMAR CO., LTD. All RightsReserved.

Fig.5. EXHAUST MANIFOLD

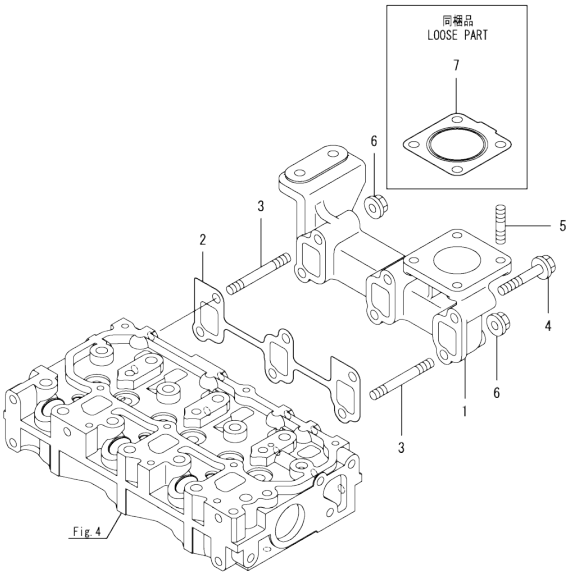

(A)=3TNM72-HWG (D)=
(B)= (E)=
(C)= (F)=

No.	Lev.	Parts No.	Description	Q'ty (A)	(B)	(C)	(D)	(E)	(F)	I	R
1	1	119717-13109	MANIFOLD, EXHAUST	1							
2	1	119717-13110	GASKET	1							
3	1	119717-13600	STUD, M8X50	2							
4	1	119802-13620	BOLT, M8X50	4							
5	1	119131-18320	STUD, M8X22	4							
6	1	26306-080002	NUT, M8	2							
7	1	119515-13200	GASKET, SILENCER	1							

N:Old ←Yes/No→ New. Q:Old ←No/Yes→ New. R:Old ←Yes/Yes→ New. S:Old ←No/No→ New. W:Add. Z:Discontinued. F:Interchangeable by set. K:Q'ty Change

Copyright (C) YANMAR CO., LTD. All RightsReserved.

Fig.6. CAMSHAFT & DRIVING GEAR

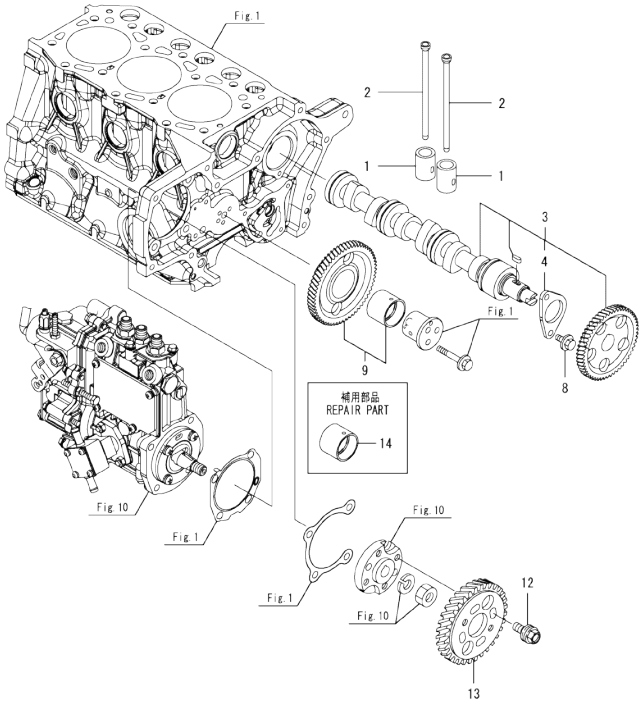

(A)=3TNM72-HWG
(B)=
(C)=
(D)=
(E)=
(F)=

No.	Lev.	Parts No.	Description	Q'ty (A)	(B)	(C)	(D)	(E)	(F)	I	R
1	1	119620-14200	TAPPET	6							
2	1	119515-14400	ROD, PUSH	6							
3	1	119025-14580	CAMSHAFT ASSY	1							
4	2	119620-02450	BEARING, THRUST	1							
8	1	26106-060122	BOLT, M6X 12 PLATED	2							
9	1	119025-25100	GEAR ASSY, IDLE	1							
12	1	129150-25301	BOLT	4							
13	1	119125-25930	GEAR, PUMP	1							
14	1	119125-25910	BUSH, IDLE GEAR	1							1

Remarks
(1)Repair part.

N:Old $\xleftarrow[\text{No}]{\text{Yes}}$ New. Q:Old $\xleftarrow[\text{Yes}]{\text{No}}$ New. R:Old $\xleftarrow[\text{Yes}]{\text{Yes}}$ New. S:Old $\xleftarrow[\text{No}]{\text{No}}$ New. W:Add. Z:Discontinued. F:Interchangeable by set. K:Q'ty Change

Copyright (C) YANMAR CO., LTD. All RightsReserved.

Fig.7. CRANKSHAFT & PISTON

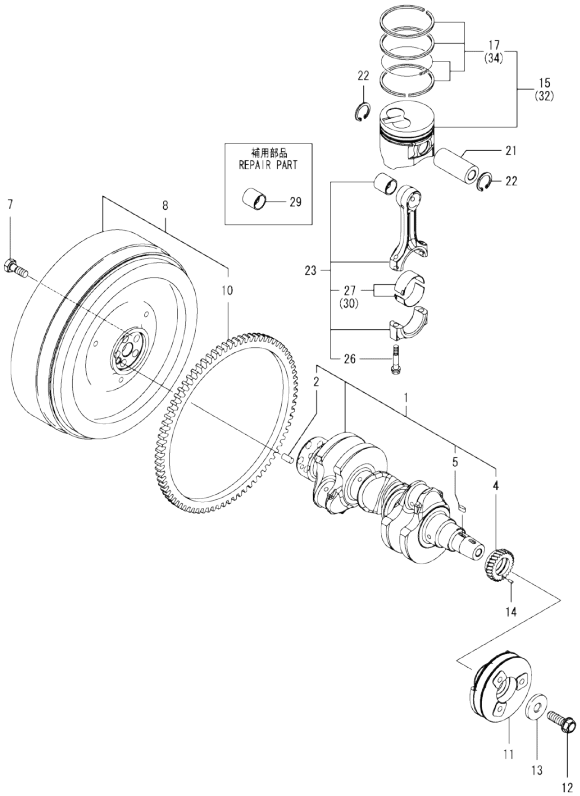

Remarks
(1)Spare parts.
(2)Under-sized(U.S.=0.25) parts.
(3)Over-sized(O.S.=0.25) parts.
(4)Fig.3 No.2-1 & Fig.14 No.1-1 interchangeable by set.

(A)=3TNM72-HWG (D)=
(B)= (E)=
(C)= (F)=

No.	Lev.	Parts No.	Description	Q'ty (A)	(B)	(C)	(D)	(E)	(F)	I	R
1	1	119025-21700	CRANKSHAFT ASSY	1							
2	2	129100-01580	PIN, PARALLEL 8X16	1							
4	2	119125-21200	GEAR, CRANKSHAFT	1							
5	2	22512-040120	KEY, 4X 12	1							
7	1	121111-21501	BOLT, FLYWHEEL	5							
8	1	119128-21591	FLYWHEEL ASSY	1							
8-1	1	119D00-21580	FLYWHEEL ASSY	1						F	4
	(A=E047983)										
10	2	119865-21600	GEAR, RING Z=116	1							
11	1	119125-21650	V-PULLEY, CRANKSHAFT	1							
12	1	119621-21681	BOLT, FLANGE 12X1.25	1							
13	1	119620-21941	WASHER, 12	1							
14	1	22351-030010	PIN, SPRING 3.0X10	1							
15	1	119517-22090	PISTON ASSY	3							
17	2	119517-22500	RING SET, PISTON	3							
21	1	119515-22300	PIN, PISTON	3							
22	1	22252-000220	RING, 22	6							
23	1	119515-23000	ROD ASSY, CONNECTING	3							
26	2	119717-23200	BOLT, CONNECTING ROD	6							
27	2	119515-23601	METAL ASSY,CRANK PIN	3							
29	1	119717-23910	METAL, PISTON PIN	3							1
30	1	119515-23611	METAL ASSY, PIN .25	3							2
32	1	119025-22900	PISTON ASSY	3							3
34	2	119609-22950	RING SET, PISTON .25	3							3

N:Old ←Yes/No→ New. Q:Old ←No/Yes→ New. R:Old ←Yes/Yes→ New. S:Old ←No/No→ New. W:Add. Z:Discontinued. F:Interchangeable by set. K:Q'ty Change

Copyright (C) YANMAR CO., LTD. All RightsReserved.

Fig.8. LUB. OIL SYSTEM

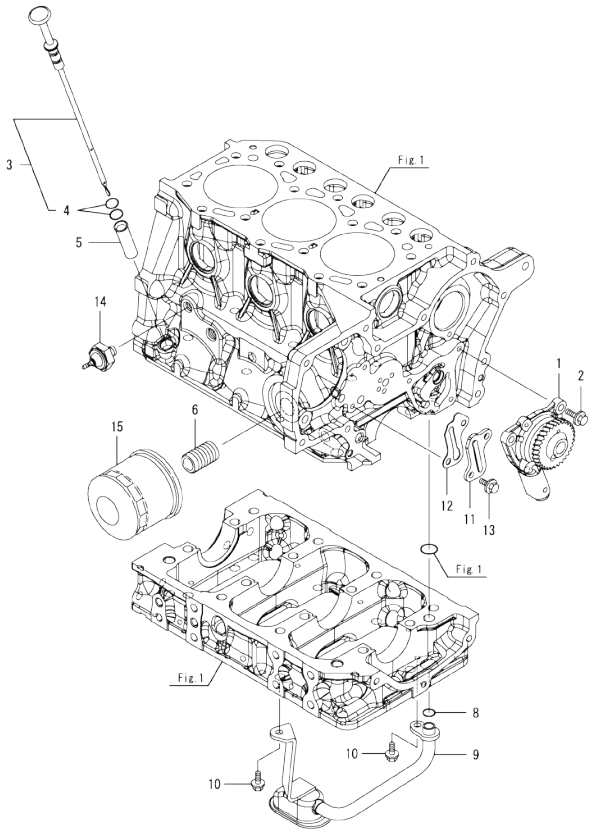

Remarks
(1)Repair part.

(A)=3TNM72-HWG
(B)=
(C)=
(D)=
(E)=
(F)=

No.	Lev.	Parts No.	Description	Q'ty (A)	(B)	(C)	(D)	(E)	(F)	I	R
1	1	119125-32000	PUMP ASSY, OIL	1							
2	1	26106-060142	BOLT, M6X 14 PLATED	3							
3	1	119025-34810	DIPSTICK, OIL	1							
4	2	119125-34900	O-RING	2							
5	1	119125-34810	GUIDE, DIPSTICK	1							
6	1	119717-35140	BOLT	1							
8	1	119209-35030	O-RING, P11	1							
9	1	119028-35080	PIPE ASSY, OIL INLET	1							
10	1	26106-060102	BOLT, M6X 10 PLATED	2							
11	1	119125-39200	COVER	1							
12	1	119125-39220	GASKET	1							
13	1	26106-060102	BOLT, M6X 10 PLATED	2							
14	1	114250-39450	SWITCH, 0.5KG	1							
15	1	119305-35151	FILTER ASSY, D68XL65	1							1

N:Old ←Yes/No→ New. Q:Old ←No/Yes→ New. R:Old ←Yes/Yes→ New. S:Old ←No/No→ New. W:Add. Z:Discontinued. F:Interchangeable by set. K:Q'ty Change

Copyright (C) YANMAR CO., LTD. All RightsReserved.

Fig.9. COOLING WATER SYSTEM

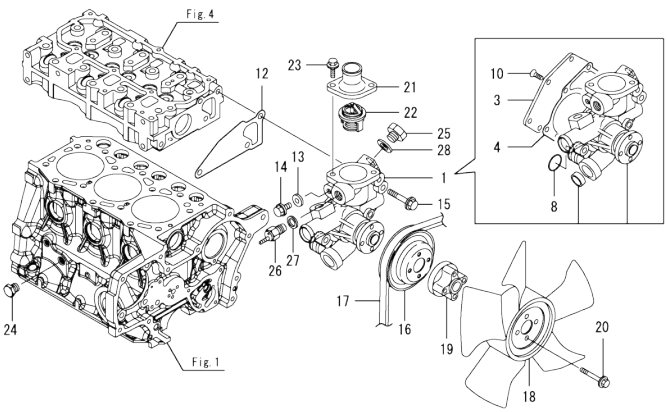

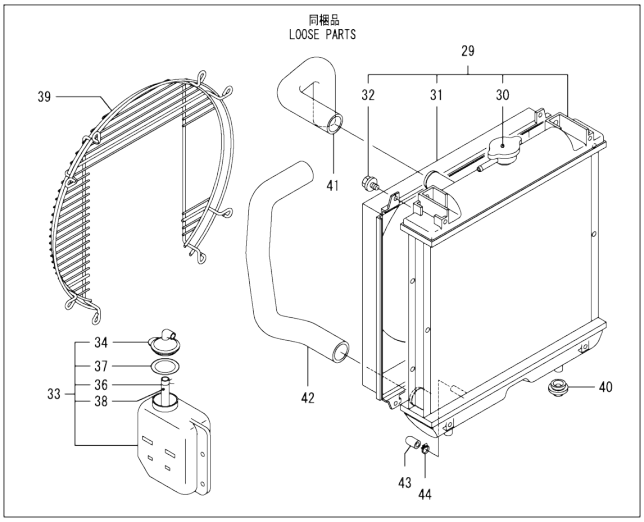

(A)=3TNM72-HWG
(B)=
(C)=
(D)=
(E)=
(F)=

No.	Lev.	Parts No.	Description	Q'ty (A)	(B)	(C)	(D)	(E)	(F)	I	R
1	1	119025-42000	PUMP ASSY, WATER	1							
3	2	119025-42020	COVER	1							
4	2	119025-42030	GASKET, WATER PUMP	1							
8	2	119685-42281	O-RING	1							
10	2	26577-060122	SCREW, M6X12	5							
12	1	119515-42020	GASKET, WATER PUMP	1							
13	1	23414-080000	GASKET, 8X1.0	1							
14	1	26106-080122	BOLT, M8X 12 PLATED	1							
15	1	26106-080452	BOLT, M8X 45 PLATED	3							
16	1	119740-42350	V-PULLEY, D=90	1							
17	1	25132-003450	V-BELT, A34.5	1							
18	1	119265-44740	FAN, D=310X5F	1							
19	1	129457-44760	SPACER, FAN	1							
20	1	26106-060452	BOLT, M6X 45 PLATED	4							
21	1	129350-49530	COVER, THERMOSTAT	1							
22	1	119717-49800	THERMOSTAT, 71	1							
23	1	26106-080202	BOLT, M8X 20 PLATED	2							
24	1	171056-49120	PLUG, DRAIN	1							
25	1	121450-42450	PLUG, M16	1							
26	1	121250-44901	SWITCH, 110	1							
27	1	124465-44950	GASKET, 16	1							
28	1	124465-44950	GASKET, 16	1							
29	1	119515-44500	RADIATOR ASSY	1							
30	2	129107-44590	CAP, RADIATOR	1							
31	2	119515-44600	SHROUD	1							
32	2	26014-060122	BOLT, M6X 12	4							
33	1	121468-44520	TANK ASSY, SUB	1							
34	2	121450-44531	CAP	1							
36	2	124450-44560	RETAINER	1							
37	2	121470-44581	GASKET	1							
38	2	23065-070130	PIPE, 7X 130	1							
39	1	119802-44570	GUARD	1							
40	1	119255-44660	ABSORBER	2							
41	1	119802-49010	PIPE, WATER	1							
42	1	119802-49020	PIPE, WATER	1							
43	1	129461-59580	CAP, FUEL OIL	1							
44	1	23000-013000	CLAMP, 13	1							

N:Old ←Yes/No→ New. Q:Old ←No/Yes→ New. R:Old ←Yes/Yes→ New. S:Old ←No/No→ New. W:Add. Z:Discontinued. F:Interchangeable by set. K:Q'ty Change

Copyright (C) YANMAR CO., LTD. All RightsReserved.

Fig.10. FUEL INJECTION PUMP

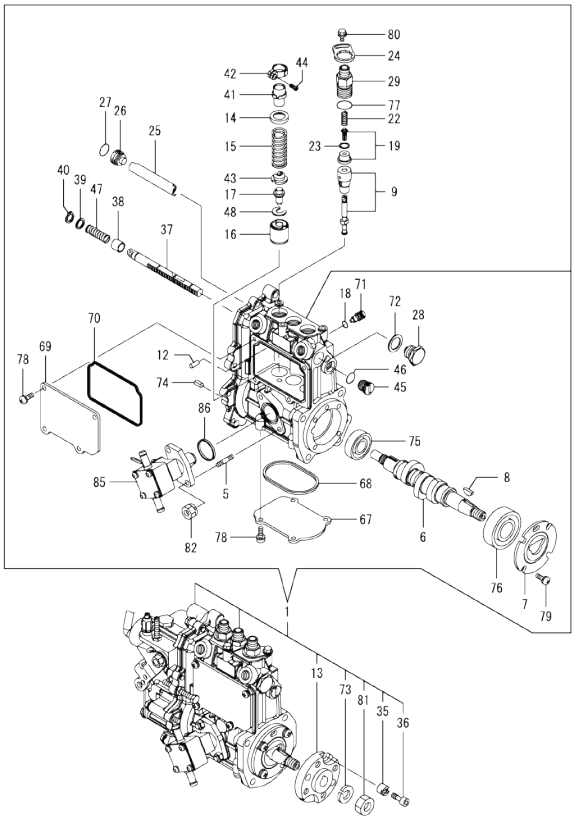

Remarks
(1)Governor(Fig.11)is incorporated in
this Fuel Injection Pump (Ref.1).

(A)=3TNM72-HWG (D)=
(B)= (E)=
(C)= (F)=

No.	Lev.	Parts No.	Description	Q'ty (A)	(B)	(C)	(D)	(E)	(F)	I	R
1	1	719028-51310	PUMP ASSY, INJECTION	1							1
5	2	129155-51020	STUD	2							
6	2	119125-51030	CAMSHAFT	1							
7	2	119125-51060	RETAINER, BEARING	1							
8	2	122710-51090	KEY	1							
9	2	119125-51100	PLUNGER ASSY	3							
12	2	129155-51140	PIN	3							
13	2	119717-51150	FLANGE	1							
14	2	158600-51170	RETAINER, SPRING	3							
15	2	119717-51190	SPRING, PLUNGER	3							
16	2	119125-51241	TAPPET	3							
17	2	119125-51250	GUIDE, TAPPET	3							
18	2	129155-51280	O-RING, S6	1							
19	2	119125-51300	VALVE ASSY, DELIVERY	3							
22	2	128990-51330	SPRING, DELIVERY	3							
23	2	124550-51350	GASKET, DELIVERY	3							
24	2	119125-51370	HOLDER	3							
25	2	129155-51400	DEFLECTOR	1							
26	2	158600-51410	PLUG, DEFLECTOR	1							
27	2	119717-51420	O-RING	1							
28	2	158600-51420	PLUG, DEFLECTOR	1							
29	2	158600-51442	VALVE ASSY, DELIVERY	3							
35	2	119125-51480	COLLAR	1							
36	2	119125-51490	BOLT	1							
37	2	119717-51500	RACK, CONTROL	1							
38	2	129155-51521	BUSH, RACK	1							
39	2	129155-51530	SPACER	1							
40	2	129155-51540	CIRCLIP	1							
41	2	129155-51550	PINION, CONTROL	3							
42	2	129100-51560	PINION	3							
43	2	119717-51570	RETAINER, SPRING	3							
44	2	129100-51570	SCREW	3							
45	2	158600-51570	PLUG	1							
46	2	129155-51580	O-RING	1							
47	2	129155-51591	SPRING, RACK	1							
48	2	129155-51600	SHIM SET, ADJUSTING	3							
67	2	119125-51700	COVER	1							
68	2	119717-51711	GASKET	1							
69	2	119717-51750	COVER	1							
70	2	119717-51761	GASKET	1							
71	2	158600-51790	STOOPER, RACK	1							
72	2	22190-160002	WASHER, SEAL 16	1							
73	2	22217-120000	WASHER, SPRING 12	1							
74	2	22351-050010	PIN, SPRING 5.0X10	2							
75	2	24101-060034	BEARING, BALL 6003	1							
76	2	24101-063034	BEARING, BALL 6303	1							
77	2	24316-000150	O-RING, 4DP15.0	3							
78	2	26022-050122	SCREW, M5X12	8							
79	2	26022-060162	SCREW, M6X16	4							
80	2	26106-050102	BOLT, M5X 10 PLATED	3							
81	2	26716-120002	NUT, M12	1							

N:Old ←Yes/No→ New. Q:Old ←No/Yes→ New. R:Old ←Yes/Yes→ New. S:Old ←No/No→ New. W:Add. Z:Discontinued. F:Interchangeable by set. K:Q'ty Change

++ CONTINUE ++

Copyright (C) YANMAR CO., LTD. All RightsReserved.

Fig.10. FUEL INJECTION PUMP

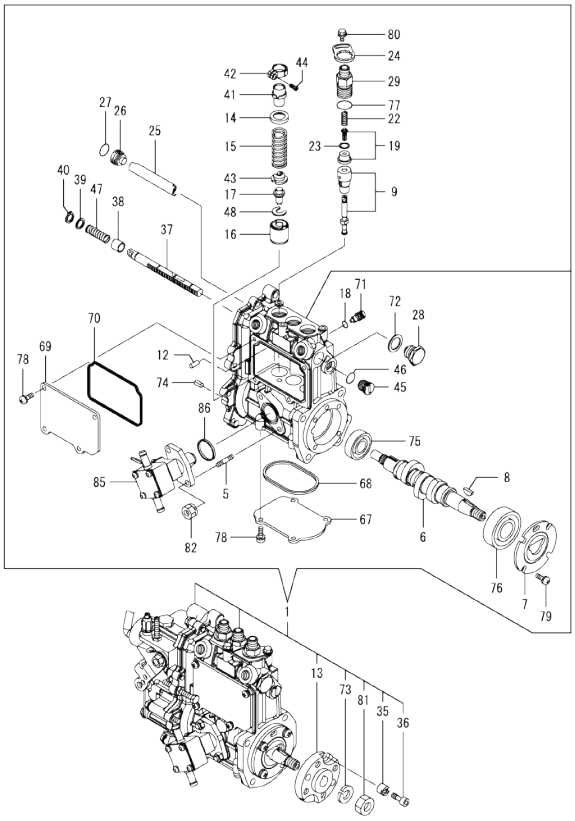

Remarks
(1)Governor(Fig.11)is incorporated in
this Fuel Injection Pump (Ref.1).

(A)=3TNM72-HWG (D)=
(B)= (E)=
(C)= (F)=

No.	Lev.	Parts No.	Description	Q'ty (A)	(B)	(C)	(D)	(E)	(F)	I	R
82	2	119717-51860	NUT, M6	2							
85	2	119125-52000	PUMP ASSY, FUEL FEED	1							
86	2	129155-52051	GASKET	1							

N:Old ←Yes/No→ New. Q:Old ←No/Yes→ New. R:Old ←Yes/Yes→ New. S:Old ←No/No→ New. W:Add. Z:Discontinued. F:Interchangeable by set. K:Q'ty Change

Copyright (C) YANMAR CO., LTD. All RightsReserved.

Fig.11. GOVERNOR

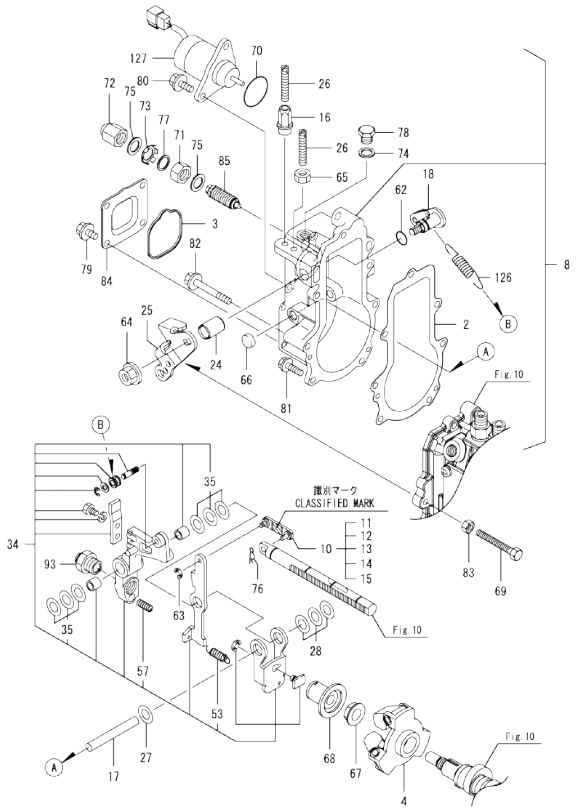

Remarks
*This figure(Governor)is incorporated in the Fuel Injection Pump (Fig.10).
(1)Selective parts; certain the classification mark, then place your order (ref. to illustration).

(A)=3TNM72-HWG
(B)=
(C)=
(D)=
(E)=
(F)=

No.	Lev.	Parts No.	Description	Q'ty (A)	(B)	(C)	(D)	(E)	(F)	I	R
2	2	119717-61050	GASKET	1							
3	2	119717-61070	GASKET	1							
4	2	119125-61201	WEIGHT ASSY,GOVERNOR	1							
8	2	119128-61200	CASE ASSY, GOVERNOR	1							
10	3	119125-61110	LINK ASSY	1							
11	4	119125-61120	LINK, MARK 93	1							1
12	4	119125-61130	LINK, MARK 98	1							1
13	4	119125-61140	LINK, MARK 88	1							1
14	4	119125-61150	LINK, MARK 00	1							1
15	4	119125-61160	LINK, MARK 03	1							1
16	3	129209-61370	NUT, M6	1							
17	3	119125-61390	SHAFT	1							
18	3	119125-61401	SHAFT ASSY	1							
24	3	119125-61430	BUSH	1							
25	3	119546-61440	LEVER, CONTROL	1							
26	3	129155-61450	BOLT, LIMITER	2							
27	3	129156-61460	SHIM, T=0.6	1							
28	3	129155-61480	SPACER ASSY	1							
34	3	119025-61501	LEVER ASSY, GOVERNOR	1							
35	4	174307-51700	SHIM SET	2							
53	4	129486-61540	SPRING, SET	1							
57	4	129100-61650	SPRING, CONTROLLER	1							
62	3	129155-61830	O-RING, S10	1							
63	3	22272-000030	RING, E- 3	1							
64	3	26366-080002	NUT, M8	1							
65	3	26756-060002	NUT, LOCK M6	1							
66	3	27260-120000	PLUG, 12	1							
67	2	129008-61301	NUT	1							
68	2	129155-61341	SLEEVE	1							
69	2	129155-61460	BOLT, IDLE	1							
70	2	158552-61900	O-RING	1							
71	2	129209-61920	NUT, ARB	1							
72	2	129209-61930	NUT, CAP	1							
73	2	129209-61970	PLATE	1							
74	2	22190-100002	WASHER, SEAL 10	1							
75	2	22190-120002	WASHER, SEAL 12	2							
76	2	22372-040000	PIN, SNAP 4	1							
77	2	23414-120016	GASKET, 12X1.0	1							
78	2	23887-100002	PLUG, 10	1							
79	2	26106-060102	BOLT, M6X 10 PLATED	4							
80	2	26106-060142	BOLT, M6X 14 PLATED	2							
81	2	26106-060202	BOLT, M6X 20 PLATED	4							
82	2	26106-060452	BOLT, M6X 45 PLATED	3							
83	2	26756-060002	NUT, LOCK M6	1							
84	2	119717-61060	COVER, GOVERNOR CASE	1							
85	2	119125-61450	LIMITER ASSY, FUEL	1							
93	2	119761-61560	ANGLEICH ASSY	1							
126	2	129500-61720	SPRING, GOVERNOR	1							
127	2	119653-77950	SOLENOID, STOP	1							

N:Old ←Yes/No→ New. Q:Old ←No/Yes→ New. R:Old ←Yes/Yes→ New. S:Old ←No/No→ New. W:Add. Z:Discontinued. F:Interchangeable by set. K:Q'ty Change

Copyright (C) YANMAR CO., LTD. All RightsReserved.

Fig.12. FUEL INJECTION VALVE

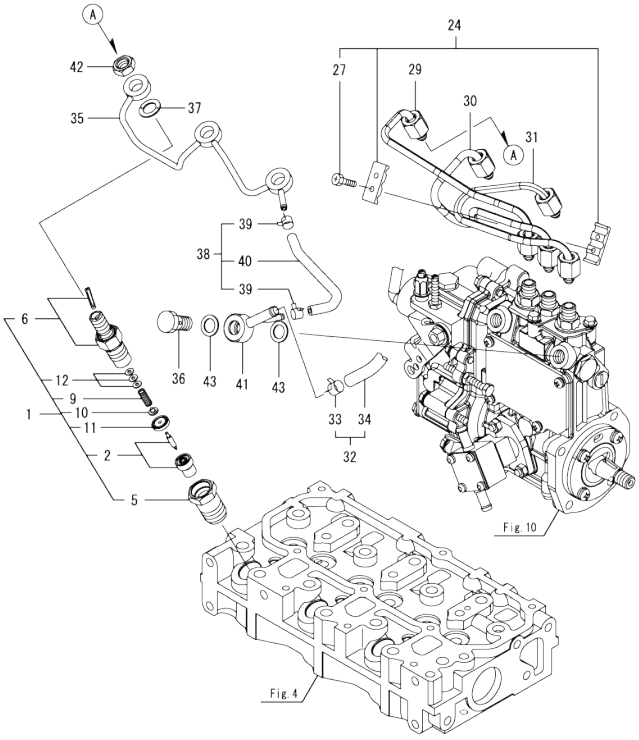

(A)=3TNM72-HWG (D)=
(B)= (E)=
(C)= (F)=

No.	Lev.	Parts No.	Description	Q'ty (A)	(B)	(C)	(D)	(E)	(F)	I	R
1	1	719125-53100	VALVE ASSY,INJECTION	3							
2	2	119125-53001	VALVE ASSY,INJECTION	3							
5	2	119125-53080	NUT, NOZZLE	3							
6	2	119125-53100	HOLDER ASSY, NOZZLE	3							
9	2	119125-53120	SPRING, NOZZLE	3							
10	2	119125-53130	SEAT, SPRING	3							
11	2	119125-53140	SPACER, VALVE STOP	3							
12	2	114250-53400	SHIM SET	3							
24	1	129150-59120	RETAINER, PIPE	1							
27	2	129150-59131	BOLT, M4X14	2							
29	1	119025-59810	PIPE, FUEL INJECTION	1							
30	1	119025-59820	PIPE, FUEL INJECTION	1							
31	1	119025-59830	PIPE, FUEL INJECTION	1							
32	1	129210-59140	PIPE ASSY, FUEL	1							
33	2	124766-59050	CLIP, HOSE 12	2							
34	2	105230-59510	PIPE, FUEL	1							
35	1	119515-59540	PIPE ASSY, RETURN	1							
36	1	119125-59560	BOLT, PIPE JOINT	1							
37	1	129901-59560	GASKET	3							
38	1	119125-59570	PIPE ASSY, RETURN	1							
39	2	124066-59100	CLIP, HOSE 8	2							
40	2	119000-59550	PIPE, FUEL RETURN	1							
41	1	119840-59570	JOINT	1							
42	1	119620-59700	NUT, NOZZLE	3							
43	1	22190-120002	WASHER, SEAL 12	2							

N:Old ←Yes/No→ New. Q:Old ←No/Yes→ New. R:Old ←Yes/Yes→ New. S:Old ←No/No→ New. W:Add. Z:Discontinued. F:Interchangeable by set. K:Q'ty Change

Copyright (C) YANMAR CO., LTD. All RightsReserved.

Fig.13. FUEL LINE

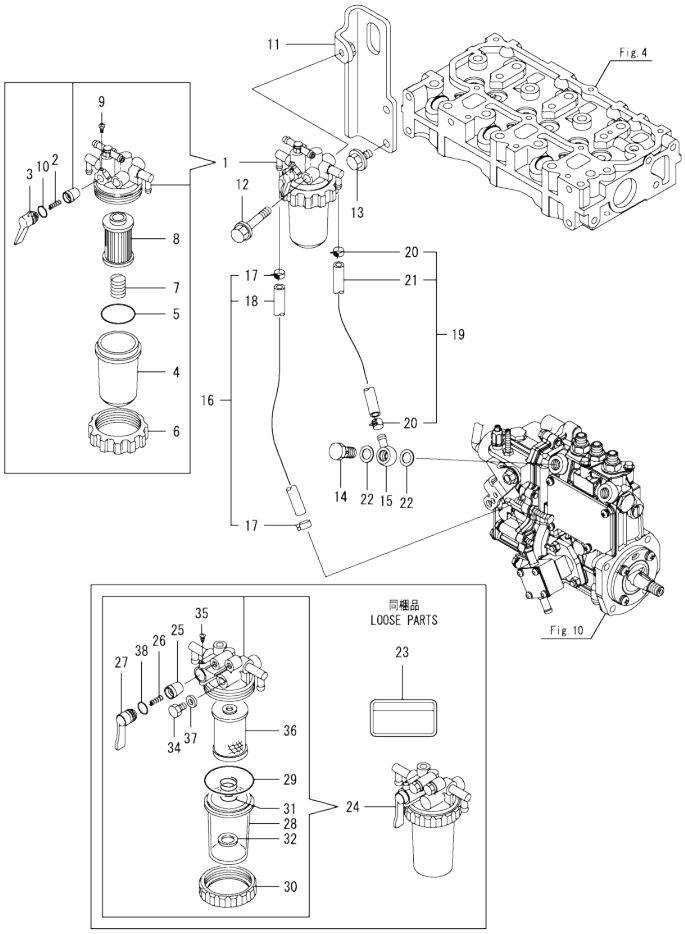

(A)=3TNM72-HWG
(B)=
(C)=
(D)=
(E)=
(F)=

No.	Lev.	Parts No.	Description	Q'ty (A)	(B)	(C)	(D)	(E)	(F)	I	R
1	1	119833-55620	FILTER ASSY, FUEL	1							
2	2	104200-55330	SPRING, VALVE	1							
3	2	119810-55340	LEVER	1							
4	2	121254-55510	COVER	1							
5	2	102103-55520	O-RING	1							
6	2	110250-55610	RING, RETAINING	1							
7	2	121250-55620	SPRING	1							
8	2	119810-55650	ELEMENT	1							
9	2	104200-55750	SCREW, M4	1							
10	2	24311-240100	O-RING, 1AP10A	1							
11	1	119028-55650	BRACKET, FILTER	1							
12	1	26014-080702	BOLT, M8X 70	1							
13	1	26106-080162	BOLT, M8X 16 PLATED	2							
14	1	103854-39140	BOLT, PIPE JOINT	1							
15	1	101304-59020	JOINT, PIPE 12	1							
16	1	129210-59140	PIPE ASSY, FUEL	1							
17	2	124766-59050	CLIP, HOSE 12	2							
18	2	105230-59510	PIPE, FUEL	1							
19	1	129210-59230	PIPE ASSY, FUEL	1							
20	2	124766-59050	CLIP, HOSE 12	2							
21	2	129555-59511	PIPE, FUEL	1							
22	1	22190-120002	WASHER, SEAL 12	2							
23	1	114110-07760	LABEL, FUEL CAUTION	1							
24	1	129335-55700	SEPARATOR ASSY,WATER	1							
25	2	104200-55321	VALVE, TAPER	1							
26	2	104200-55330	SPRING, VALVE	1							
27	2	104200-55341	HANDLE	1							
28	2	124064-55510	COVER	1							
29	2	102103-55520	O-RING	1							
30	2	110250-55610	RING, RETAINING	1							
31	2	121257-55720	SPRING	1							
32	2	121257-55731	FLOAT	1							
34	2	101720-55750	PLUG, 6	2							
35	2	104200-55750	SCREW, M4	1							
36	2	171081-55910	SCREEN	1							
37	2	23418-060000	GASKET, 6X1.0	2							
38	2	24311-240100	O-RING, 1AP10A	1							

N:Old ←Yes/No→ New. Q:Old ←No/Yes→ New. R:Old ←Yes/Yes→ New. S:Old ←No/No→ New. W:Add. Z:Discontinued. F:Interchangeable by set. K:Q'ty Change

Copyright (C) YANMAR CO., LTD. All RightsReserved.

Fig.14. STARTING MOTOR

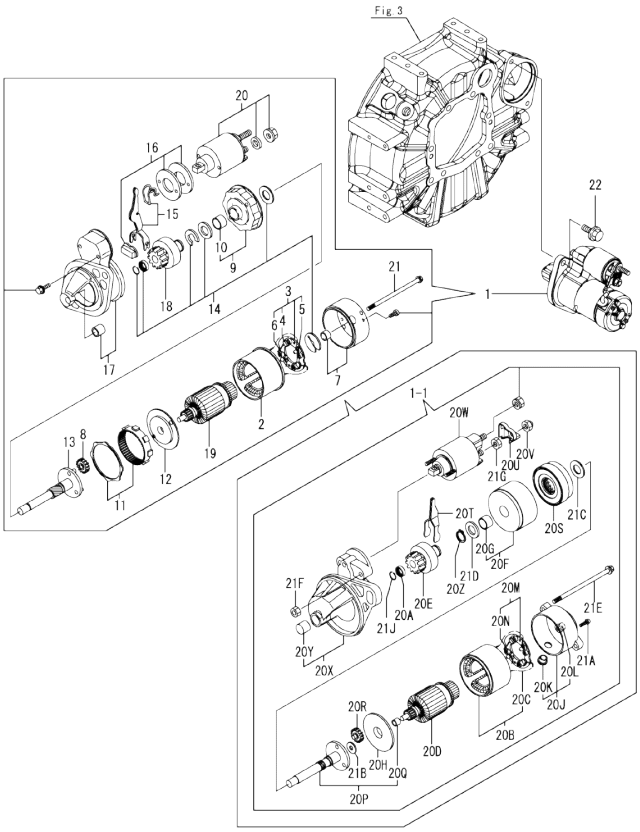

Remarks
(1)Fig.3 No.2-1 & Fig.7 No.8-1 interchangeable by set.

(A)=3TNM72-HWG (D)=
(B)= (E)=
(C)= (F)=

No.	Lev.	Parts No.	Description	Q'ty (A)	(B)	(C)	(D)	(E)	(F)	I	R
1	1	119125-77010	STARTER ASSY, 1.2KW	1							
1-1	1	119515-77010	STARTER, P1.0	1						F	1
	(A=E047983)										
2	2	129698-77110	YOKE ASSY	1						Z	
	(A=E047983)										
3	2	129698-77120	HOLDER ASSY, BRUSH	1						Z	
	(A=E047983)										
4	3	129698-77130	BRUSH	2						Z	
	(A=E047983)										
5	3	129698-77140	BRUSH SET	1						Z	
	(A=E047983)										
6	3	129698-77150	SPRING, BRUSH	4						Z	
	(A=E047983)										
7	2	129698-77161	COVER ASSY, STARTER	1						Z	
	(A=E047983)										
8	2	119125-77170	GEAR, PLANETARY	3						Z	
	(A=E047983)										
9	2	129698-77180	BRACKET, CENTER P	1						Z	
	(A=E047983)										
10	3	129698-77190	BRACKET, CENTER	1						Z	
	(A=E047983)										
11	2	119125-77200	GEAR, INTERNAL	1						Z	
	(A=E047983)										
12	2	119125-77210	BRACKET, CENTER A	1						Z	
	(A=E047983)										
13	2	119125-77230	SHAFT, PINION	1						Z	
	(A=E047983)										
14	2	129698-77250	WASHER SET	1						Z	
	(A=E047983)										
15	2	119125-77270	LEVER SET, SHIFT	1						Z	
	(A=E047983)										
16	2	119125-77280	COVER KIT, DUST	1						Z	
	(A=E047983)										
17	2	119125-77520	CASE ASSY, GEAR	1						Z	
	(A=E047983)										
18	2	119125-77660	PINION ASSY	1						Z	
	(A=E047983)										
19	2	119125-77710	ARMATURE ASSY	1						Z	
	(A=E047983)										
20	2	119125-77760	SWITCH ASSY, MAGNET	1						Z	
	(A=E047983)										
20A	2	X0280210331	NUT	1						W	
	(A=E047983)										
20B	2	X0281007680	YOKE ASSY	1						W	
	(A=E047983)										
20C	3	X0280996180	STARTER KIT	2						W	
	(A=E047983)										
20D	2	X0282005871	ARMATURE ASSY	1						W	
	(A=E047983)										
20E	2	X0283006960	CLUTCH	1						W	
	(A=E047983)										

N:Old ←Yes/No→ New, Q:Old ←No/Yes→ New, R:Old ←Yes/Yes→ New, S:Old ←No/No→ New, W:Add, Z:Discontinued, F:Interchangeable by set, K:Q'ty Change

++ CONTINUE ++

Copyright (C) YANMAR CO., LTD. All RightsReserved.

Fig.14. STARTING MOTOR

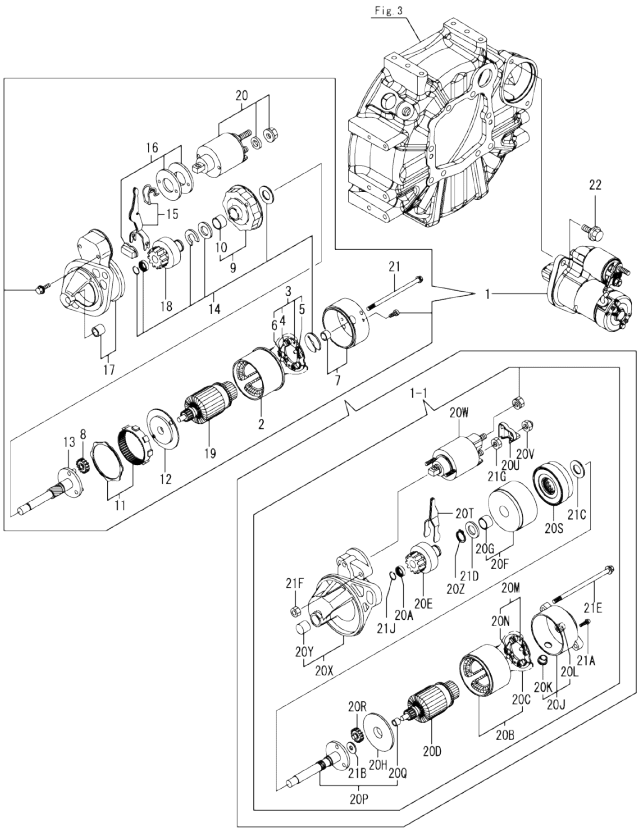

Remarks
(1)Fig.3 No.2-1 & Fig.7 No.8-1 interchangeable by set.

(A)=3TNM72-HWG (D)=
(B)= (E)=
(C)= (F)=

No.	Lev.	Parts No.	Description	Q'ty (A)	(B)	(C)	(D)	(E)	(F)	I	R
20F	2	X0284105040	BEARING ASSY, SUB	1						W	
	(A=E047983)										
20G	3	X9491034330	BEARING	1						W	
	(A=E047983)										
20H	2	X0284525010	PLATE	1						W	
	(A=E047983)										
20J	2	X0285007030	FRAME ASSY	1						W	
	(A=E047983)										
20K	3	X0280626010	COVER	1						W	
	(A=E047983)										
20L	3	X9491040990	BEARING	1						W	
	(A=E047983)										
20M	2	X0285105190	HOLDER ASSY	1						W	
	(A=E047983)										
20N	3	X0285205030	SPRING	4						W	
	(A=E047983)										
20P	2	X0286105010	SHAFT ASSY, SUB	1						W	
	(A=E047983)										
20Q	3	X9491034320	BEARING	1						W	
	(A=E047983)										
20R	2	X0286305010	GEAR	3						W	
	(A=E047983)										
20S	2	X0286355010	GEAR	1						W	
	(A=E047983)										
20T	2	X0287405140	LEVER	1						W	
	(A=E047983)										
20U	2	X1280330020	COVER, TERMINAL	1						W	
	(A=E047983)										
20V	2	X1289510130	NUT	1						W	
	(A=E047983)										
20W	2	X2534000090	SWITCH ASSY	1						W	
	(A=E047983)										
20X	2	X4284001590	HOUSING ASSY	1						W	
	(A=E047983)										
20Y	3	X9491050100	BEARING, NEEDLE	1						W	
	(A=E047983)										
20Z	2	X9055715000	RING	1						W	
	(A=E047983)										
21	2	124195-77770	BOLT, THROUGH	2						Z	
	(A=E047983)										
21A	2	X9490065670	SCREW, M4X6	2						W	
	(A=E047983)										
21B	2	X9490138090	WASHER	1						W	
	(A=E047983)										
21C	2	X9490138100	WASHER	1						W	
	(A=E047983)										
21D	2	X9490138110	WASHER	1						W	
	(A=E047983)										
21E	2	X9490423520	BOLT, THROUGH	2						W	
	(A=E047983)										
21F	2	X9490560750	NUT	2						W	

N:Old ←Yes/No→ New. Q:Old ←No/Yes→ New. R:Old ←Yes/Yes→ New. S:Old ←No/No→ New. W:Add. Z:Discontinued. F:Interchangeable by set. K:Q'ty Change

++ CONTINUE ++

Copyright (C) YANMAR CO., LTD. All RightsReserved.

Fig.14. STARTING MOTOR

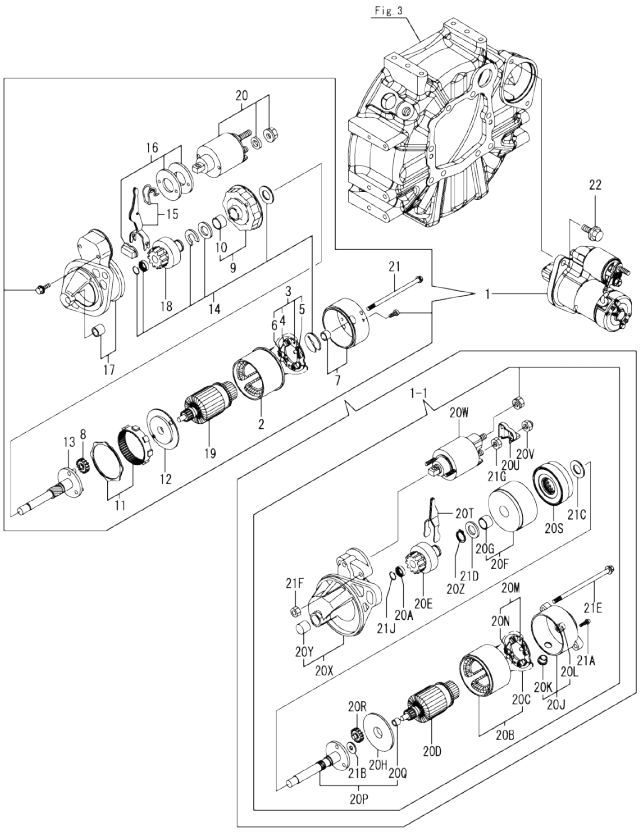

No.	Lev.	Parts No.	Description	Q'ty (A)	(B)	(C)	(D)	(E)	(F)	I	R
			(A)=3TNM72-HWG (B)= (C)=				(D)= (E)= (F)=				
21G	(A=E047983) 2 (A=E047983)	X9490562360	NUT	1						W	
21J	2 (A=E047983)	X9490721360	RING	1						W	
22	1	26106-100252	BOLT, M10X 25 PLATED	2							

Remarks
(1)Fig.3 No.2-1 & Fig.7 No.8-1 interchangeable by set.

N:Old ←Yes/No→ New. Q:Old ←No/Yes→ New. R:Old ←Yes/Yes→ New. S:Old ←No/No→ New. W:Add. Z:Discontinued. F:Interchangeable by set. K:Q'ty Change

Copyright (C) YANMAR CO., LTD. All RightsReserved.

Fig.15. GENERATOR

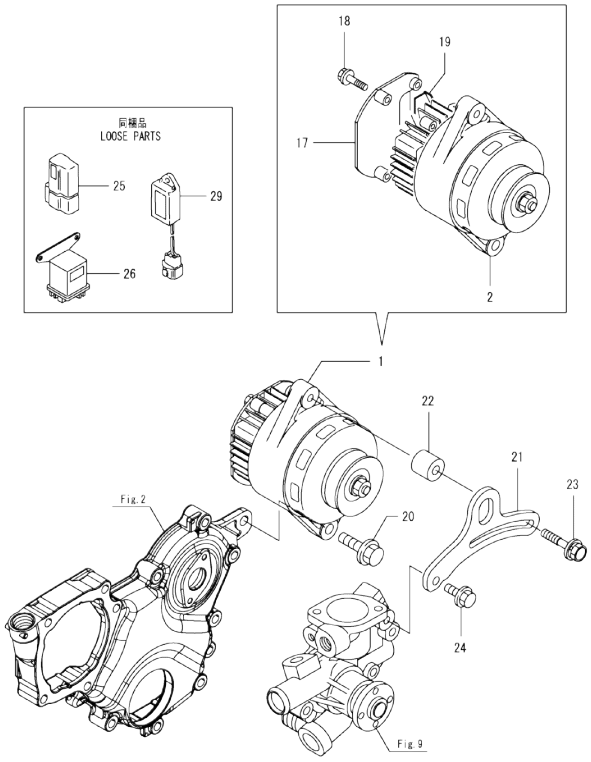

Remarks
*This item is applicable to [(A)=EXXXXX-1] or previous machines. Refer to Fig.18.

(A)=3TNM72-HWG (D)=
(B)= (E)=
(C)= (F)=

No.	Lev.	Parts No.	Description	Q'ty (A)	(B)	(C)	(D)	(E)	(F)	I	R
1	1	119128-77200	GENERATOR, 12V-40A	1							
2	2	119128-77220	GENERATOR ASSY	1							
17	2	119128-77370	COVER	1							
18	2	119128-77380	BOLT, FLANGE	4							
19	2	119128-77390	COVER	1							
20	1	26106-100402	BOLT, M10X 40 PLATED	1							
21	1	119125-77320	ADJUSTER	1							
22	1	124732-77340	SPACER	1							
23	1	129972-77341	BOLT, ADJUSTER L=50	1							
24	1	26106-080202	BOLT, M8X 20 PLATED	1							
25	1	119643-66900	DIODE	1							
26	1	119650-77910	RELAY ASSY, GLOW	1							
29	1	129211-77920	TIMER	1							

N:Old ←Yes/No→ New. Q:Old ←No/Yes→ New. R:Old ←Yes/Yes→ New. S:Old ←No/No→ New. W:Add. Z:Discontinued. F:Interchangeable by set. K:Q'ty Change

Copyright (C) YANMAR CO., LTD. All RightsReserved.

Fig.17. (15A)GENERATOR

(A)=3TNM72-HWG
(B)=
(C)=
(D)=
(E)=
(F)=

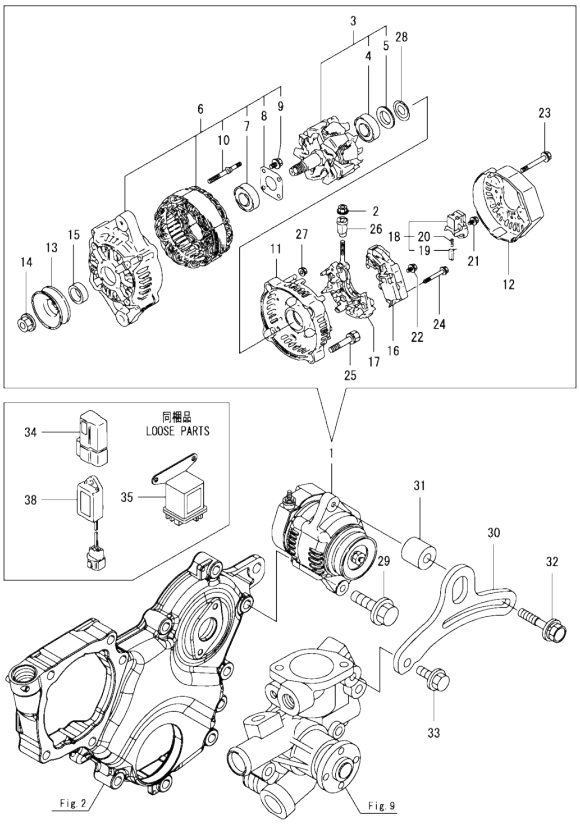

No.	Lev.	Parts No.	Description	Q'ty (A)	(B)	(C)	(D)	(E)	(F)	I	R
1	1	129423-77200	GENERATOR, 12V-40A	1							
2	2	X9490561001	NUT	1							
3	2	119620-77380	ROTOR ASSY	1							
4	3	123501-79240	BEARING, BALL	1							
5	3	119620-79250	COVER	1							
6	2	119620-77421	FRAME ASSY, DRIVE	1							
7	3	119620-79200	BEARING, BALL	1							
8	3	119620-79210	PLATE, RETAINER	1							
9	3	119620-79220	SCREW	4							
10	3	119620-79230	STUD	2							
11	2	119620-77440	FRAME ASSY	1							
12	2	129240-79300	COVER	1							
13	2	119620-77461	PULLEY	1							
14	2	119620-77471	NUT	1							
15	2	119620-77490	COLLAR	1							
16	2	129423-77710	REGULATOR ASSY	1							
17	2	119620-79260	HOLDER	1							
18	2	129052-79270	HOLDER, BRUSH	1							
19	3	119620-77480	BRUSH ASSY	2							
20	3	119620-79280	SPRING	2							
21	2	119620-79290	SCREW	6							
22	2	119620-79300	SCREW	1							
23	2	119620-79310	BOLT	3							
24	2	119620-79320	SCREW	2							
25	2	119620-79330	BOLT	2							
26	2	119620-79340	BUSH, INSULATION	1							
27	2	119620-79350	NUT	2							
28	2	119620-79360	WASHER, THRUST	1							
29	1	26106-100402	BOLT, M10X 40 PLATED	1							
30	1	119125-77320	ADJUSTER	1							
31	1	124732-77340	SPACER	1							
32	1	129972-77341	BOLT, ADJUSTER L=50	1							
33	1	26106-080202	BOLT, M8X 20 PLATED	1							
34	1	119643-66900	DIODE	1							
35	1	119650-77911	RELAY ASSY, GLOW	1							
38	1	129211-77920	TIMER	1							

Remarks
*This item is applicable to [(A)=EXXXXX] or following machines. Refer to Fig.15.

N:Old $\frac{\text{Yes}}{\text{No}}$ New. Q:Old $\frac{\text{No}}{\text{Yes}}$ New. R:Old $\frac{\text{Yes}}{\text{Yes}}$ New. S:Old $\frac{\text{No}}{\text{No}}$ New. W:Add. Z:Discontinued. F:Interchangeable by set. K:Q'ty Change

Copyright (C) YANMAR CO., LTD. All RightsReserved.

Fig.16. GASKET SET

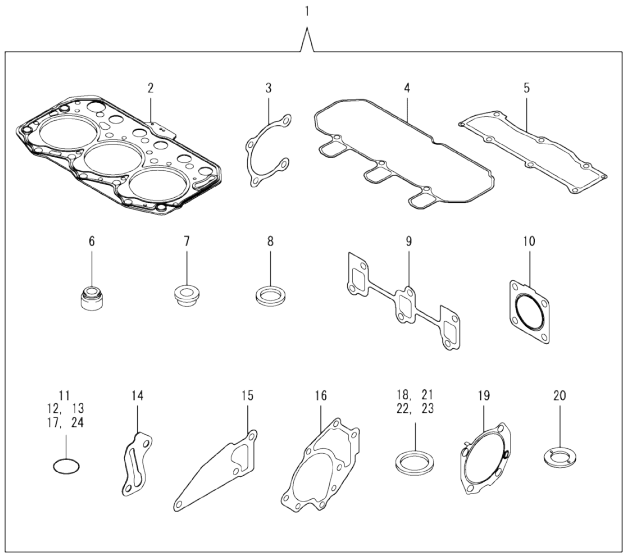

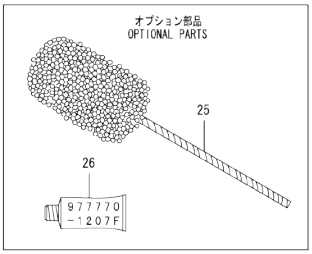

Remarks
(1)Optional parts.

(A)=3TNM72-HWG
(B)=
(C)=
(D)=
(E)=
(F)=

No.	Lev.	Parts No.	Description	Q'ty (A)	(B)	(C)	(D)	(E)	(F)	I	R
1	1	119025-92600	GASKET SET	1							1
2	2	119025-01331	GASKET, HEAD	1							
3	2	119125-01790	GASKET	1							
4	2	119515-11310	GASKET, BONNET	1							
5	2	119515-11330	GASKET	1							
6	2	119717-11340	SEAL, VALVE STEM	6							
7	2	129901-11450	PROTECTOR, NOZZLE	3							
8	2	119600-11460	GASKET, NOZZLE	6							
9	2	119717-13110	GASKET	1							
10	2	119515-13200	GASKET, SILENCER	1							
11	2	129900-32040	O-RING, P14	1							
12	2	119125-34900	O-RING	1							
13	2	119209-35030	O-RING, P11	1							
14	2	119125-39220	GASKET	1							
15	2	119515-42020	GASKET, WATER PUMP	1							
16	2	119025-42030	GASKET, WATER PUMP	1							
17	2	119209-42320	O-RING, P21 EPDM	1							
18	2	124465-44950	GASKET, 16	1							
19	2	119125-51800	GASKET	1							
20	2	129901-59560	GASKET	3							
21	2	22190-120002	WASHER, SEAL 12	5							
22	2	22190-160002	WASHER, SEAL 16	1							
23	2	23414-080000	GASKET, 8X1.0	1							
24	2	24311-000180	O-RING, 1AP18.0	2							
25	1	129400-92410	HONE	1							1
26	1	977770-1207F	GASKET.LIQUID	1							1

N:Old ←Yes/No→ New. Q:Old ←No/Yes→ New. R:Old ←Yes/Yes→ New. S:Old ←No/No→ New. W:Add. Z:Discontinued. F:Interchangeable by set. K:Q'ty Change

Copyright (C) YANMAR CO., LTD. All RightsReserved.

Parts No. Index

Parts No.	Fig. No.	Ref. No.
101304-59020	13	15
101720-55750	13	34
102103-55520	13	5
		29
103854-39140	13	14
104200-55321	13	25
104200-55330	13	2
		26
104200-55341	13	27
104200-55750	13	9
		35
105010-11490	4	3
105230-59510	12	34
	13	18
106760-01770	2	6
110250-55610	13	6
		30
114110-07760	13	23
114250-39450	8	14
114250-53400	12	12
119000-59550	12	40
119025-01331	1	31
	16	2
119025-01530	2	1
119025-01690	3	7
119025-01760	3	6
119025-14580	6	3
119025-21700	7	1
119025-22900	7	32
119025-25100	6	9
119025-34810	8	3
119025-42000	9	1
119025-42020	9	3
119025-42030	9	4
	16	16
119025-59810	12	29
119025-59820	12	30
119025-59830	12	31
119025-61501	11	34
119025-92600	16	1
119027-01560	1	1
119028-35080	8	9
119028-55650	13	11
119125-01750	2	2
119125-01790	1	32
	16	3
119125-01800	1	33
119125-01960	1	7
119125-01970	1	5
119125-02061	1	9

Parts No.	Fig. No.	Ref. No.
119125-02900	1	36
119125-02910	1	39
119125-02930	1	23
119125-02940	1	42
119125-21200	7	4
119125-21650	7	11
119125-25050	1	26
119125-25910	6	14
119125-25930	6	13
119125-32000	8	1
119125-34810	8	5
119125-34900	8	4
	16	12
119125-39200	8	11
119125-39220	8	12
	16	14
119125-51030	10	6
119125-51060	10	7
119125-51100	10	9
119125-51241	10	16
119125-51250	10	17
119125-51300	10	19
119125-51370	10	24
119125-51480	10	35
119125-51490	10	36
119125-51700	10	67
119125-51800	1	35
	16	19
119125-52000	10	85
119125-53001	12	2
119125-53080	12	5
119125-53100	12	6
119125-53120	12	9
119125-53130	12	10
119125-53140	12	11
119125-59560	12	36
119125-59570	12	38
119125-61110	11	10
119125-61120	11	11
119125-61130	11	12
119125-61140	11	13
119125-61150	11	14
119125-61160	11	15
119125-61201	11	4
119125-61390	11	17
119125-61401	11	18
119125-61430	11	24
119125-61450	11	85
119125-77010	14	1
119125-77170	14	8

Parts No.	Fig. No.	Ref. No.
119125-77200	14	11
119125-77210	14	12
119125-77230	14	13
119125-77270	14	15
119125-77280	14	16
119125-77320	15	21
	17	30
119125-77520	14	17
119125-77660	14	18
119125-77710	14	19
119125-77760	14	20
119125-77800	4	53
119125-77820	4	54
119128-01670	3	2
119128-21591	7	8
119128-61200	11	8
119128-77200	15	1
119128-77220	15	2
119128-77370	15	17
119128-77380	15	18
119128-77390	15	19
119131-18320	5	5
119209-35030	8	8
	16	13
119209-42320	16	17
119255-44660	9	40
119265-44740	9	18
119285-11990	4	11
119305-35151	8	15
119515-01200	1	30
119515-11101	4	13
119515-11110	4	14
119515-11200	4	20
119515-11240	4	21
119515-11280	4	25
119515-11310	4	44
	16	4
119515-11320	4	45
119515-11330	4	46
	16	5
119515-11380	4	34
119515-11800	4	55
119515-13200	5	7
	16	10
119515-14400	6	2
119515-22300	7	21
119515-23000	7	23
119515-23601	7	27
119515-23611	7	30
119515-42020	9	12

Parts No.	Fig. No.	Ref. No.
119515-42020	16	15
119515-44500	9	29
119515-44600	9	31
119515-59540	12	35
119515-77010	14	1 -1
119517-11740	4	4
119517-22090	7	15
119517-22500	7	17
119546-61440	11	25
119600-11460	4	2
	16	8
119609-22950	7	34
119620-01620	1	13
119620-01750	3	3
119620-02450	6	4
119620-14200	6	1
119620-21941	7	13
119620-59700	12	42
119620-77380	17	3
119620-77421	17	6
119620-77440	17	11
119620-77461	17	13
119620-77471	17	14
119620-77480	17	19
119620-77490	17	15
119620-79200	17	7
119620-79210	17	8
119620-79220	17	9
119620-79230	17	10
119620-79250	17	5
119620-79260	17	17
119620-79280	17	20
119620-79290	17	21
119620-79300	17	22
119620-79310	17	23
119620-79320	17	24
119620-79330	17	25
119620-79340	17	26
119620-79350	17	27
119620-79360	17	28
119621-21681	7	12
119643-66900	15	25
	17	34
119650-77910	15	26
119650-77911	17	35
119653-77950	11	127
119685-42281	9	8
119717-01800	2	3
119717-03031	4	35
119717-03070	4	36

Parts No. Index

Parts No.	Fig. No.	Ref. No.
119717-03070	4	37
119717-11131	4	15
119717-11190	4	17
119717-11260	4	24
119717-11340	4	18
	16	6
119717-11350	4	19
119717-11650	4	26
119717-13109	5	1
119717-13110	5	2
	16	9
119717-13600	5	3
119717-23200	7	26
119717-23910	7	29
119717-35140	8	6
119717-49800	9	22
119717-51150	10	13
119717-51190	10	15
119717-51420	10	27
119717-51500	10	37
119717-51570	10	43
119717-51711	10	68
119717-51750	10	69
119717-51761	10	70
119717-51860	10	82
119717-61050	11	2
119717-61060	11	84
119717-61070	11	3
119734-02220	1	34
119740-42350	9	16
119761-61560	11	93
119802-03100	4	38
119802-03110	4	39
119802-03121	4	40
119802-03131	4	41
119802-03141	4	42
119802-13620	5	4
119802-44570	9	39
119802-49010	9	41
119802-49020	9	42
119810-55340	13	3
119810-55650	13	8
119833-55620	13	1
119840-59570	12	41
119865-21600	7	10
119888-01850	3	2 B
		4
119D00-01610	3	2 -1
119D00-21580	7	8 -1
121023-01551	2	8

Parts No.	Fig. No.	Ref. No.
121111-21501	7	7
121250-44901	9	26
121250-55620	13	7
121254-55510	13	4
121257-55720	13	31
121257-55731	13	32
121450-42450	9	25
121450-44531	9	34
121468-44520	9	33
121470-44581	9	37
122710-51090	10	8
123501-79240	17	4
124060-01050	1	4
124064-55510	13	28
124066-59100	12	39
124160-01751	4	33
124195-77770	14	21
124450-44560	9	36
124465-44950	9	27
		28
	16	18
124550-51350	10	23
124732-77340	15	22
	17	31
124766-59050	12	33
	13	17
		20
128990-51330	10	22
129008-61301	11	67
129052-79270	17	18
129100-01580	3	1
	7	2
129100-51560	10	42
129100-51570	10	44
129100-61650	11	57
129107-44590	9	30
129150-11230	4	27
129150-11750	4	29
129150-25301	6	12
129150-59120	12	24
129150-59131	12	27
129155-51020	10	5
129155-51140	10	12
129155-51280	10	18
129155-51400	10	25
129155-51521	10	38
129155-51530	10	39
129155-51540	10	40
129155-51550	10	41
129155-51580	10	46

Parts No.	Fig. No.	Ref. No.
129155-51591	10	47
129155-51600	10	48
129155-52051	10	86
129155-61341	11	68
129155-61450	11	26
129155-61460	11	69
129155-61480	11	28
129155-61830	11	62
129156-61460	11	27
129209-61370	11	16
129209-61920	11	71
129209-61930	11	72
129209-61970	11	73
129210-59140	12	32
	13	16
129210-59230	13	19
129211-77920	15	29
	17	38
129240-79300	17	12
129335-55700	13	24
129350-49530	9	21
129400-92410	16	25
129423-77200	17	1
129423-77710	17	16
129457-44760	9	19
129461-59580	9	43
129486-61540	11	53
129500-61720	11	126
129508-11180	4	16
129555-59511	13	21
129698-77110	14	2
129698-77120	14	3
129698-77130	14	4
129698-77140	14	5
129698-77150	14	6
129698-77161	14	7
129698-77180	14	9
129698-77190	14	10
129698-77250	14	14
129900-32040	1	27
	16	11
129901-11450	4	1
	16	7
129901-59560	12	37
	16	20
129972-77341	15	23
	17	32
158552-61900	11	70
158600-51170	10	14
158600-51410	10	26

Parts No.	Fig. No.	Ref. No.
158600-51420	10	28
158600-51442	10	29
158600-51570	10	45
158600-51790	10	71
171056-49120	9	24
171081-55910	13	36
174307-51700	11	35
22190-100002	11	74
22190-120002	11	75
	12	43
	13	22
	16	21
22190-160002	3	9
	10	72
	16	22
22217-120000	10	73
22242-000120	4	30
22252-000220	7	22
22272-000030	11	63
22351-030010	7	14
22351-050010	10	74
22351-060012	1	28
22372-040000	11	76
22512-040120	7	5
22857-500100	4	47
		48
22857-500160	4	49
23000-013000	9	44
23065-070130	9	38
23414-080000	9	13
	16	23
23414-120016	11	77
23418-060000	13	37
23876-005000	1	10
	4	12
23887-100002	11	78
24101-060034	10	75
24101-063034	10	76
24311-000180	2	7
	16	24
24311-000320	4	50
24311-240100	13	10
		38
24316-000150	10	77
24341-000240	2	9
25132-003450	9	17
26014-060122	9	32
26014-080702	13	12
26022-050122	10	78
26022-060162	10	79

Parts No. Index

Parts No.	Fig. No.	Ref. No.
26106-050102	10	80
26106-060102	8	10
		13
	11	79
26106-060122	6	8
26106-060142	8	2
	11	80
26106-060162	2	10
26106-060202	4	51
	11	81
26106-060352	3	10
26106-060402	1	29
26106-060452	9	20
	11	82
26106-060752	4	52
26106-080122	9	14
26106-080162	13	13
26106-080202	9	23
	15	24
	17	33
26106-080352	2	4
26106-080402	4	32
26106-080452	2	5
	9	15
26106-100252	14	22
26106-100402	15	20
	17	29
26206-100252	3	5
26306-080002	5	6
26366-080002	11	64
26577-060122	9	10
26716-120002	10	81
26756-060002	11	65
		83
26979-050162	4	31
27241-300000	1	11
27241-450000	1	12
27260-120000	11	66
719028-51310	10	1
719125-53100	12	1
977770-1207F	16	26
X0280210331	14	20 A
X0280626010	14	20 K
X0280996180	14	20 C
X0281007680	14	20 B
X0282005871	14	20 D
X0283006960	14	20 E
X0284105040	14	20 F
X0284525010	14	20 H
X0285007030	14	20 J

Parts No.	Fig. No.	Ref. No.
X0285105190	14	20 M
X0285205030	14	20 N
X0286105010	14	20 P
X0286305010	14	20 R
X0286355010	14	20 S
X0287405140	14	20 T
X1280330020	14	20 U
X1289510130	14	20 V
X2534000090	14	20 W
X4284001590	14	20 X
X9055715000	14	20 Z
X9490065670	14	21 A
X9490138090	14	21 B
X9490138100	14	21 C
X9490138110	14	21 D
X9490423520	14	21 E
X9490560750	14	21 F
X9490561001	17	2
X9490562360	14	21 G
X9490721360	14	21 J
X9491034320	14	20 Q
X9491034330	14	20 G
X9491040990	14	20 L
X9491050100	14	20 Y

Parts No.	Fig. No.	Ref. No.

Parts No.	Fig. No.	Ref. No.